Caution: Please ensure that tablet is securely fixed in

support@ctadigital.com

Using the Wall Mount Bases

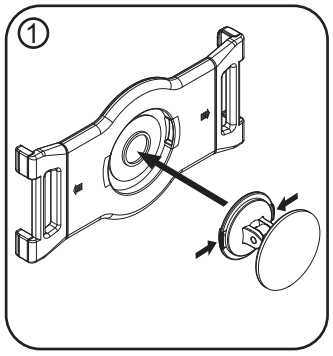

Squeeze buttons on inner circle, then remove tablet bracket from base.

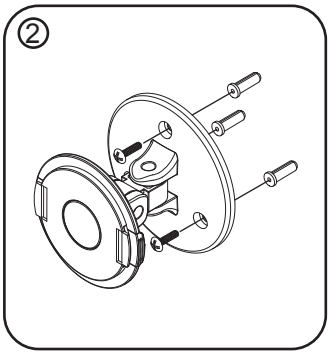

Mount base to wall with included hardware.

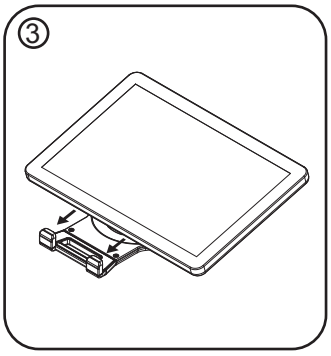

Place tablet against one end of bracket.

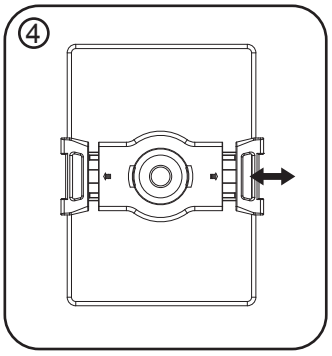

Pull the opposite bracket out, then release to secure tablet.

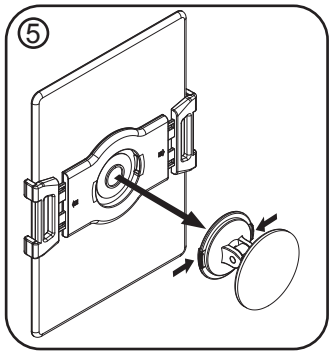

Squeeze headpiece buttons then attach tablet bracket.
Release buttons to connect.

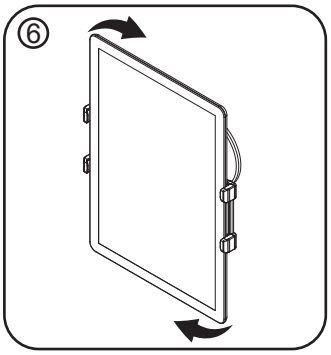

Rotate tablet for portrait or landscape display.

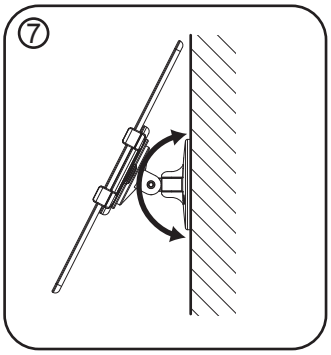

Tilt for optimal viewing angle.

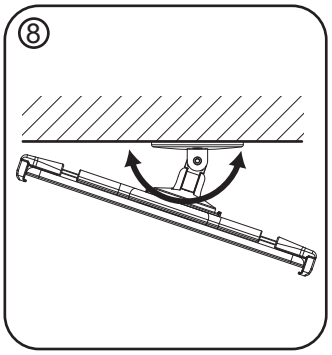

Tilt along opposite axis for more angle control.

Using the Tabletop Stand

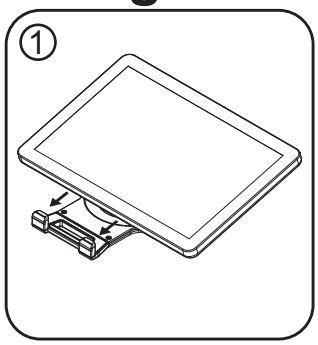

Place tablet against one end of bracket.

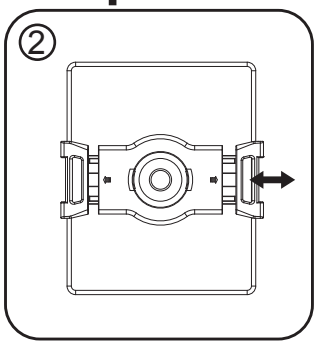

Pull the opposite bracket out, then release to secure tablet.

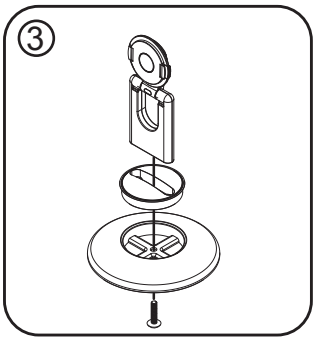

Push screw through underside.
Attach circle insert and neck.
Use screwdriver to tighten

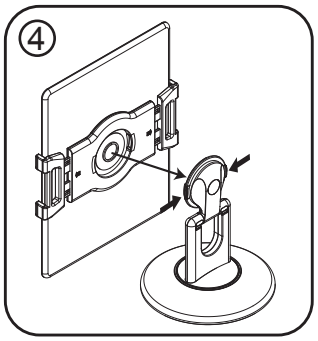

Squeeze headpiece buttons then attach tablet bracket.
Release buttons to connect.

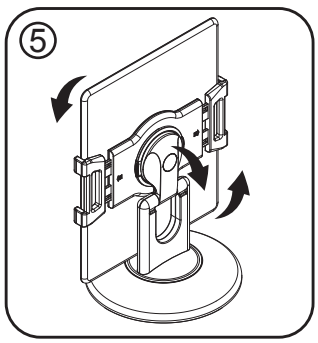

Rotate for portrait and landscape displays.

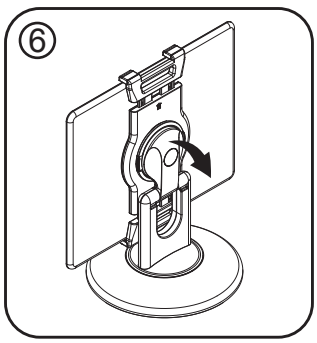

Use tilting headpiece for angle adjustment.

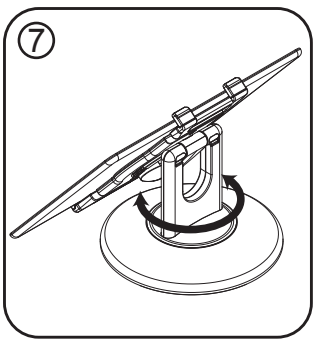
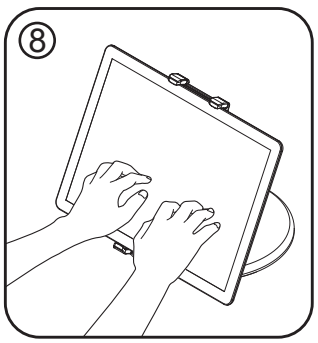
Stand base rotates 360 degrees.